PVC ball valve - Position options

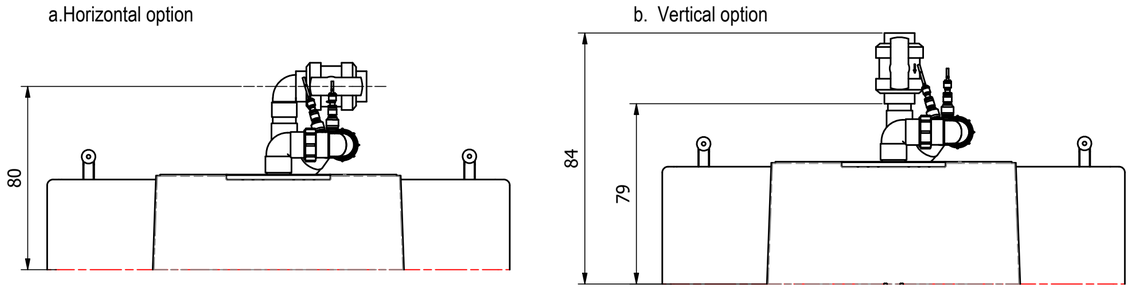

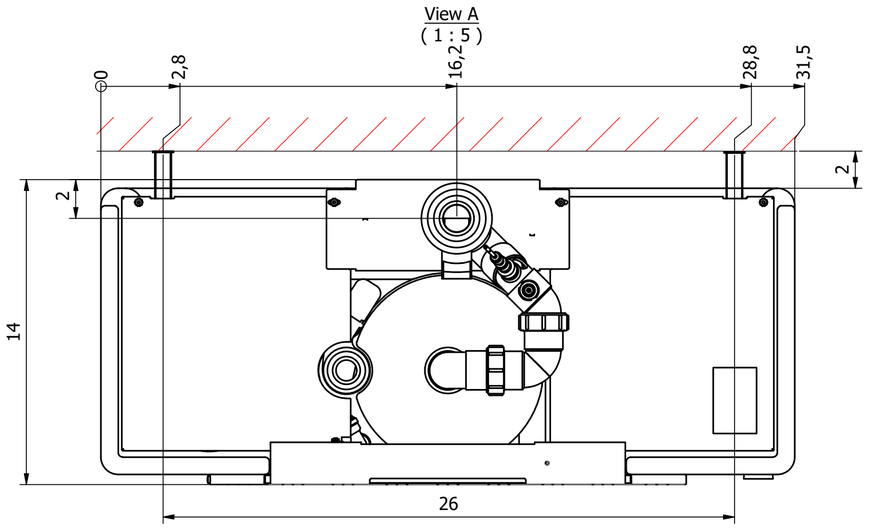

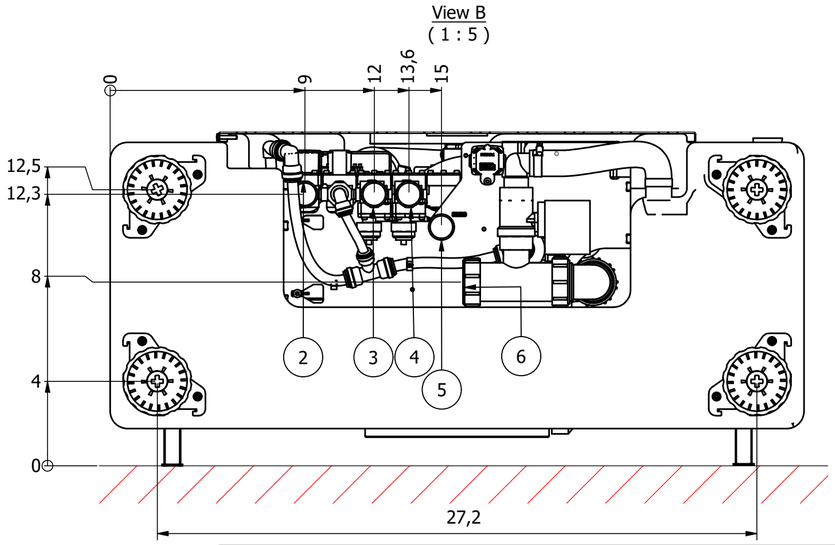

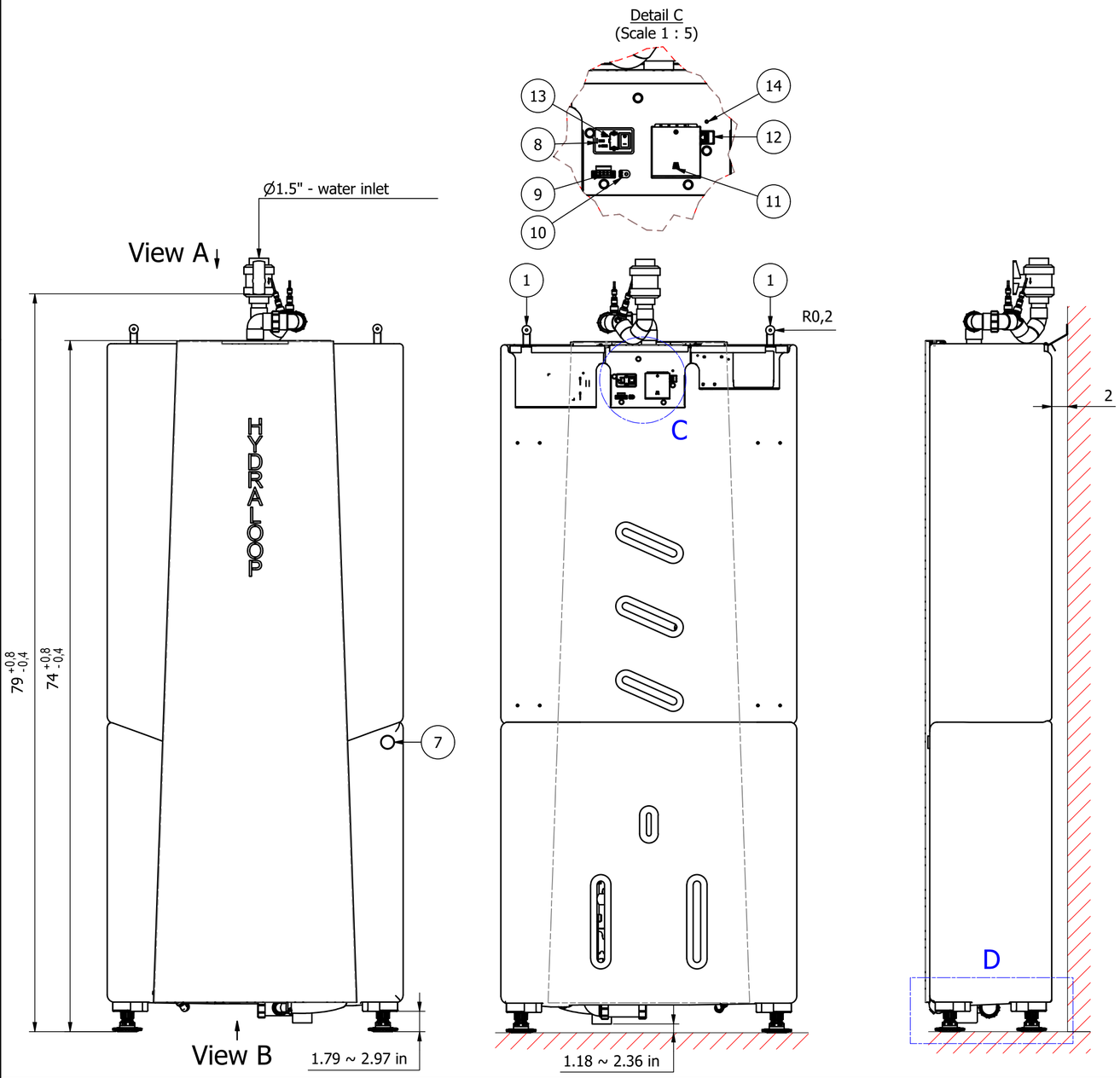

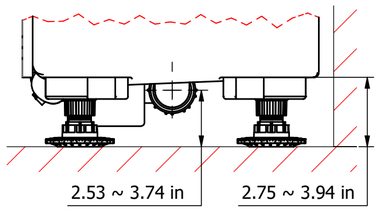

TABLE

POS	DESCRIPTION
1	Wall mount
2	Feed to Garden
3	Feed to toilet cistern (WC)
4	Feed to washing machine
5	Mains water supply
6	Waste water sleeve
7	Maintenance inlet for citric acid cleaning
8	Power supply
9	RS485
10	USB-C
11	Battery
12	LAN
13	Fuse
14	OPT button

DIMENSIONS ACC. TO NEN-ISO 406
SHAPE- AND POSITION TOLERANCES ACC. TO NEN-ISO 1101
GENERAL TOLERANCES ACC. TO ISO 2768-mK

Description: H300 V2.1 230V STD

Modified by : KD
Modified date : 04/02/2025

HYDRALOOP
USE WATER TWICE

Scale: 1 : 10
Sheet: 2 /2
Units: inch
Projection:
A2
Mass: N/A
Material :
Drawing NO : HYD0845AC
Project : PDP-0218

Created by: KshitijaDeshmukh Creation date: 06/12/2024